DOREX PRO 3310 SERIES

SINGLE ACTING SPRING HINGES

DOREX

The Dorex Pro 3310 series single acting spring hinges are available in a variety of sizes, finishes and styles. Made from the highest quality materials these hinges are recommended by door hardware specialist for moderate to high traffic wood or hollow metal door applications. Dorex Pro brand products are recognized for value while delivering lasting performance.

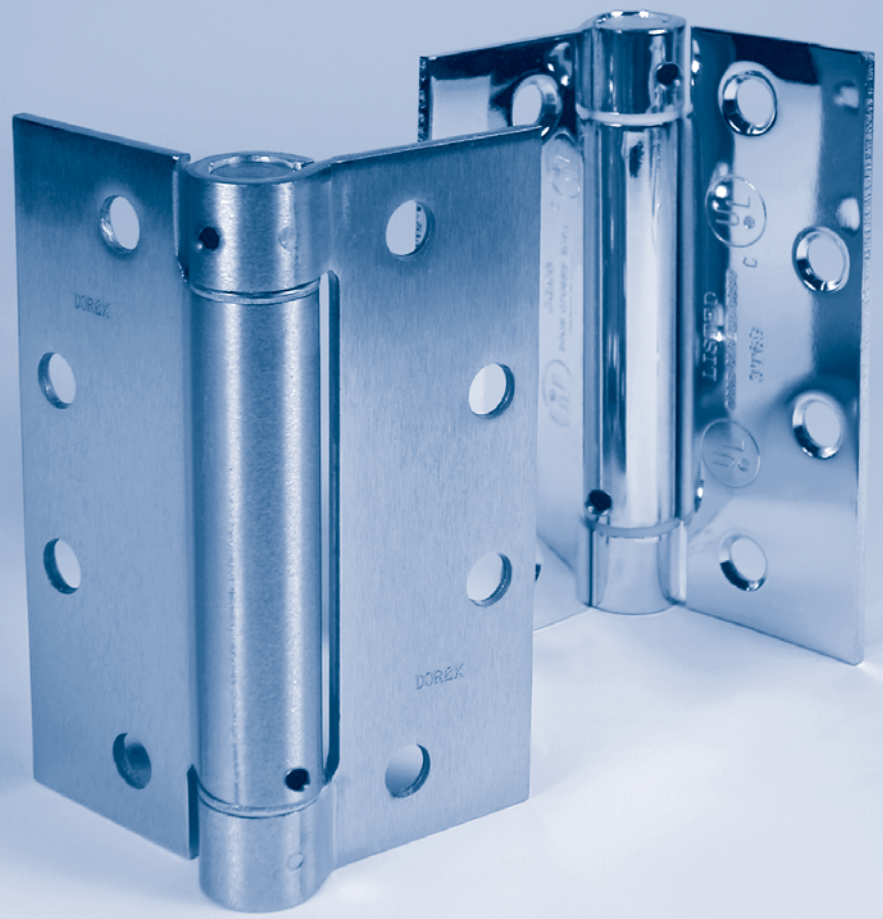

- Non-handed
- High quality steel base material
- High grade plated finishes
- Nylon bearings provide silent action
- Easily adjusted spring tension
- Standard template hole pattern
- Pivot point aligns with Dorex Pro hinges of same size
- Quality wood screws and undercut machine screws (if applicable) included
- Spring tensioner included
- cULus listed as a closing device

c UL us

03.030 DOREX PRO 3310 SERIES HINGES

SPECIFICATION

All full mortise single acting template spring hinges shall be Dorex Pro 3310 series. Hinges shall be made from select quality steel base materials and high grade plated finishes. Hinges shall be of standard weight, have 3 knuckles with silent action nylon bearings. Hinges shall have four square corners. Hinges shall be reversible and supplied with spring tensioner and all necessary wood and undercut machine (if applicable) mounting fasteners.

OPTIONAL: Hinges shall have 1/4" (6.4mm) or 5/8" (15.9mm) radius corners.

SELECTION GUIDE

MODEL NUMBER	SIZE AND DESCRIPTION	MACHINE SCREWS	WOOD SCREWS	BOX / CASE QTY	CASE LBS / KG
3310 3535	3 1/2" (88.9mm) x 3 1/2" (88.9mm) square corners	N/A	#9 x 3/4" (19.1mm)	2 / 40	32.0 / 14.5
3310 44	4" (101.6mm) x 4" (101.6mm) square corners				36.6 / 16.6
3310 454	4 1/2" (114.3mm) x 4" (101.6mm) square corners	#12-24 x 1/2" (12.7mm)	#12 x 1 1/4" (31.8mm)		51.0 / 23.1
3311 44	4" (101.6mm) x 4" (101.6mm) 1/4" (6.4mm) radius corners	N/A	#9 x 3/4" (19.1mm)		36.6 / 16.6

SIZE CHART

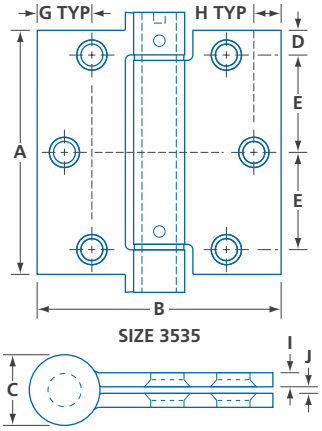

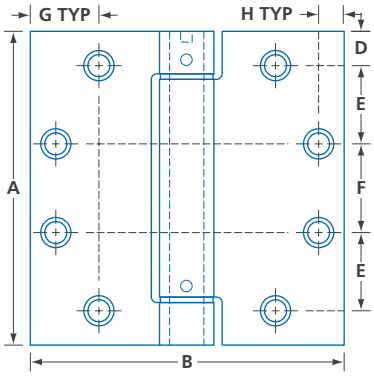

MAXIMUM DOOR WEIGHT SPECIFICATIONS

SIZE	MAX. DOOR WEIGHT LBS / KG	SPRING HINGES (PCS)	BUTT HINGES (PCS)
3535	50.0 / 22.7	1	2
	70.0 / 31.8	2	1
	90.0 / 40.9	3	N/A
44	60.0 / 27.2	1	2
	85.0 / 38.6	2	1
	100.0 / 45.5	3	N/A
454	70.0 / 31.8	1	2
	90.0 / 41.0	2	1
	120.0 / 54.5	3	N/A

Maximum door size for labeled doors: 36 x 84 x 1 3/4 (914 x 2134 x 44)

Maximum door size for non-labeled doors: 48 x 90 x 1 3/4 (1219 x 2286 x 44)

3310	C15	454
SERIES	FINISH	SIZE

MODEL	A	B	C	D	E	F	G	H	I	J
3310 3535	3 1/2 (88.9)	3 1/2 (88.9)	23/32 (18.5)	11/32 (9.0)	1 13/32 (35.4)	N/A	11/16 (17.5)	11/32 (9.1)	1/8 (3.2)	1/16 (1.6)
3310 44	4 (101.6)	4 (101.6)		1/2 (12.7)	1 (25.4)	31/32 (24.6)	3/4 (19.1)	3/8 (9.5)		
3310 454	4 1/2 (114.3)		25/32 (19.6)		1 1/8 (28.6)	1 7/32 (31.3)	1 (25.4)			

FINISH / AVAILABILITY CHART

MODEL	3535	44	454
3310	C15, C3	C15, C3	C15, C26D, C3, C3M, C5
3311	N/A	C15	N/A

C15 – Satin nickel **C26D** – Satin chrome **C3** – Polished brass
C3M – Mirror polished brass **C5** – Antique brass **N/A** – Not applicable

Dimensions unless specified otherwise are: Inches (Millimeters)